Received 11 January 2015
Revised 3 April 2015
25 May 2015
Accepted 3 June 2015

Multiscale subgrid models of large eddy simulation for turbulent flows

Jianying Jiao and Ye Zhang
Department of Geology and Geophysics, University of Wyoming, Laramie, Wyoming, USA

Abstract

Purpose – The purpose of this paper is to propose three modified subgrid-scale (SGS) eddy-viscosity models to improve their original eddy-viscosity models (the Smagorinsky model (SM), the mixed-scale model (MSM), and the wall-adapted local eddy-viscosity model (WALE)) in the simulation of turbulent flows in near-wall region.

Design/methodology/approach – The subgrid viscosity is related to the norm of strain rate tensor of the smallest resolved scales, instead of the norm of the resolved strain rate tensor of the large scales.

Findings – All the SGS viscosity of the modified eddy-viscosity models (small-large model, modified MSM, and modified WALE) is closer to y^{+3} behavior than those of the original eddy-viscosity models (SM, MSM, and WALE) near the wall.

Originality/value – The norm of strain rate tensor of the smallest scales used in eddy-viscosity models, instead of the norm of strain rate tensor, makes the eddy viscosity in near-wall region approach to zero in a physical sense.

Keywords Channel flow, Eddy viscosity, Square cylinder, Subgrid-scale model

Paper type Research paper

1. Introduction

With the development of computational fluid dynamics (CFD), large eddy simulation (LES) is commonly employed to investigate the instantaneous three-dimensional velocity structures of turbulent flows. Specially, many subgrid-scale (SGS) models of LES have been proposed, such as the classic Smagorinsky model (SM) (Smagorinsky, 1963), the mixed-scale model (MSM) (Sagaut, 1996), the wall-adapted local eddy-viscosity model (WALE) (Nicoud and Ducros, 1999), the multiscale subgrid models (Hughes *et al.*, 1998, 2000, 2001a, b), the dynamic eddy-viscosity models (Germano *et al.*, 1991; Ghosal *et al.*, 1995; Meneveau *et al.*, 1996; Huang and Li, 2010; Lee *et al.*, 2010; Singh and You, 2013), SGS models based on mixing length (Gu *et al.*, 2011a, b; Zhaolin *et al.*, 2012), scale similarity models (Liu *et al.*, 1994; Davidson, 2004), vortex-based SGS models (White and Nepf, 2008; Misra and Pullin, 1997; Chung and Matheou, 2014), and others. Most of the SGS models are variations of or improvements made upon the classic SM which tends to produce excessive dissipation in the near-wall region. In particular, SM gives non-zero eddy viscosity when fluid velocity gradient exists. However, turbulent fluctuations in the near-wall region are observed to be damped thus eddy viscosity there should be zero.

Among the SGS models cited above, the MSM (Sagaut, 1996) and the WALE (Nicoud and Ducros, 1999) are of interest. Subgrid viscosity value of the MSM goes naturally to zero in the near-wall region, but MSM still predicts excessive dissipation in the same region. WALE produces a y^{+3} behavior in the near-wall region, but this model has deficiency in predicting the logarithmic region of channel flow (Nicoud and Ducros, 1999). On the other hand, Hughes *et al.* (2001b) first introduced the variational multiscale model

International Journal of Numerical Methods for Heat & Fluid Flow
Vol. 26 No. 5, 2016
pp. 1380-1390

0961-5539
DOI 10.1108/HFF-01-2015-0009

(VMS) within the framework of finite element method and subsequently proposed the VMS based on SM. The variational multiscale SGS model of (Hughes *et al.*, 1998) is $\tau_{ij} = -2\nu_{sgs}\overline{S}^{v}_{ij} + \delta_{ij}\tau_{kk}/3$, where the strain rate tensor of the smallest resolved scale ($\overline{S}^{v}_{ij} = (\partial(\overline{u}_i - \tilde{\overline{u}}_i)/\partial x_j + \partial(\overline{u}_j - \tilde{\overline{u}}_j)\partial x_i)/2$) is obtained through test filtering. The variational multiscale SGS models have two possible variants, $\nu_{sgs} = (C_s\overline{\Delta})^2|\overline{S}^{v}|$ or $\nu_{sgs} = (C_s\overline{\Delta})^2|\overline{S}|$, which are validated by Hughes *et al.* (1998, 2000, 2001a, b). This work develops improved MSM and WALE models based on the proposed theory of Hughes *et al.* (1998, 2000, 2001a, b).

Direct numerical simulations (DNS) of channel flows with different Reynolds numbers by Iwamoto *et al.* (2005) suggest that the near-wall turbulence is associated not only with the near-wall fine-scale structures, but also with the near-wall large scale structures. This means that subgrid viscosity should reflect the fine-scale fluctuations while the subgrid stress tensor in SM is associated with the large scale resolved stain rate tensor. Based on the idea of (Hughes *et al.*, 1998, 2000, 2001a, b) and the results of Iwamoto *et al.* (2005), the norm of the large scale strain rate tensor of subgrid viscosity could be replaced by the norm of strain rate tensor of the smallest resolved scales. In the following, we substitute the norm of strain rate tensor of the smallest resolved scales into the above-mentioned eddy-viscosity models, such as MSM and WALE, and we evaluate the effect of this substitution through numerical simulations of (1) turbulent flows in a channel with a friction-velocity-based Reynolds number of 395 and 590, and (2) turbulent flows passing a square cylinder at a higher Reynolds number.

2. Eddy-viscosity models

The classical SGS model based on the eddy-viscosity assumption, or the SGS tensor, is as follows:

$$\tau_{ij} = -2\nu_{sgs}\overline{S}_{ij} + \delta_{ij}\tau_{kk}/3 \tag{1}$$

where:

$$\overline{S}_{ij} = \left(\partial\overline{u}_i/\partial x_j + \partial\overline{u}_j/\partial x_i\right)/2 \tag{2}$$

$\overline{S}_{ij}$ and $\overline{u}_i$ are the deformation tensor and velocity of the resolved field, respectively. In Smagorinsky's model, the eddy viscosity is assumed to be proportional to a subgrid characteristic length scale $\overline{\Delta}$ and the norm of a local strain rate $|\overline{S}|$. That is:

$$\nu_{sgs} = (C_s\overline{\Delta})^2|\overline{S}| \tag{3}$$

where C_s is Smagorinsky coefficient (take at a value of 0.1 (Smagorinsky, 1963)), $\overline{\Delta}$ is the grid filter scale, and $|\overline{S}| = (2\overline{S}_{ij}\overline{S}_{ij})^{1/2}$.

In the MSM proposed by Sagaut (1996), the SGS viscosity is related to not only the norm of the strain rate tensor but also the turbulence energy (the smallest resolved scales). The model then arises as a weighted geometric average of $|\overline{S}|$ and SGS turbulence energy (q_{sgs}):

$$\nu_{sgs} = C_M\left(|\overline{S}|\right)^{\alpha}(q_{sgs})^{(1-\alpha)/2}\overline{\Delta}^{1+\alpha} \tag{4}$$

where $q_{sgs} = 0.5\overline{u}'_i\overline{u}'_i$ and $\overline{u}'_i = \overline{u}_i - \tilde{\overline{u}}_i$ ($\overline{u}'_i$, $\overline{u}_i$, and $\tilde{\overline{u}}_i$ are the resolved smallest velocity, the filtered velocity, and the resolved velocity in the sense of the test filter, respectively).

α is a weighting factor in the range of (0, 1) and C_M is a constant. In this work, the values $C_M = 0.02$ and $\alpha = 0.5$ are used (Sagaut, 1996). As q_{sgs} is not immediately available, it is estimated by a filtering operation over the test filter $\tilde{\overline{\Delta}}$ ($\tilde{\overline{\Delta}} = 2\overline{\Delta}$). Because of the manner in which q_{sgs} is determined, the model ensures a monotonic decay of the SGS viscosity as the wall is approached and vanishing eddy-viscosity level in non-turbulent conditions.

The WALE is proposed by Nicoud and Ducros (1999). In contrast to SM which relates the viscosity to the symmetric part of the velocity gradient tensor, $\overline{g}_{ij} = \partial \overline{u}_i / \partial x_j$, the WALE model is based on the symmetric part of the square of this tensor, $\overline{G}_{ij} = (\overline{g}_{ik}\overline{g}_{kj} + \overline{g}_{jk}\overline{g}_{ki})/2$. Its traceless part, $\overline{G}^a_{ij} = \overline{G}_{ij} - \delta_{ij}\overline{G}_{kk}/3$, is used to determine the eddy viscosity using (Nicoud and Ducros, 1999):

$$\nu_{sgs} = C_m \overline{\Delta}^2 \left(\sqrt{\left|\overline{G}^a\right|}\right)^6 \Big/ \left(\left|\overline{S}\right|^5 + \left(\sqrt{\left|\overline{G}^a\right|}\right)^5\right) \tag{5}$$

where C_m is a constant, which is assigned 0.1 in this work (Nicoud and Ducros, 1999).

An improvement of the classic Smgorinsky model, the so-called small-large model (SLM), is proposed by Hughes *et al.* (2001b) based on the variational multiscale idea (Hughes *et al.*, 1998, 2000, 2001a, b). The SLM is proposed as follow:

$$\tau_{ij} = -2\nu_{sgs}\overline{S}_{ij} + \delta_{ij}\tau_{kk}/3$$

$$\nu_{sgs} = \left(C_s\overline{\Delta}\right)^2 \left|\overline{S}^v\right| \tag{6}$$

$$\left|\overline{S}^v\right| = \left(2\overline{S}^v_{ij}\overline{S}^v_{ij}\right)^{1/2} \tag{7}$$

$$\overline{S}^v_{ij} = \left(\partial\left(\overline{u}_i - \tilde{\overline{u}}_i\right)/\partial x_j + \partial\left(\overline{u}_j - \tilde{\overline{u}}_j\right)\partial x_i\right)/2 \tag{8}$$

where the constant C_s is equal to 0.1 (Hughes *et al.*, 2001b). The eddy viscosity of SLM still goes to a non-zero value in the vicinity of a wall, but the eddy-viscosity value of SLM is less than that of SM.

The subgrid viscosity of the MSM goes to zero in the near-wall region, because the small scale $\overline{u}'_i$ goes to zero in the near-wall region. However, MSM still exhibits excessive dissipation in the near-wall region. In the following, eddy viscosity of a modified MSM (M-MSM) is proposed as follow:

$$\nu_{sgs} = C_M \left(\left|\overline{S}^v\right|\right)^{\alpha} (q_{sgs})^{(1-\alpha)/2} \overline{\Delta}^{1+\alpha} \tag{9}$$

where α is a weighting factor in the range of (0, 1) and C_M is a constant. In this work, C_M of 0.02 and α of 0.5, the same as those of MSM, are adopted for M-MSM. We will evaluate the effect of replacing the norm of the strain rate tensor $\overline{S}_{ij}$ in MSM with the norm of the strain rate tensor of the smallest resolved scales ($\overline{S}^v_{ij}$).

Similarly, the norm of the strain rate tensor in the WALE is replaced by the norm of the strain rate tensor of the smallest resolved scales. Then, eddy viscosity of a modified

WALE (M-WALE) is proposed as follows:

$$\nu_{sgs} = C_m \overline{\Delta}^2 \left(\sqrt{\left|\overline{G}^{av}\right|}\right)^6 \Big/ \left(\left|\overline{S}^v\right|^5 + \left(\sqrt{\left|\overline{G}^{av}\right|}\right)^5\right) \tag{10}$$

where:

$$\overline{G}_{ij}^{av} = \overline{G}_{ij}^{v} - \delta_{ij}\overline{G}_{kk}^{v}/3 \tag{11}$$

$$\overline{G}_{ij}^{v} = \left(\overline{g}_{ik}^{v}\overline{g}_{kj}^{v} + \overline{g}_{jk}^{v}\overline{g}_{ki}^{v}\right)/2 \tag{12}$$

$$\overline{g}_{ij}^{v} = \partial\left(\overline{u}_i - \tilde{\overline{u}}_i\right)/\partial x_j \tag{13}$$

where the constant $C_m = 0.1$ (Nicoud and Ducros, 1999).

To verify the validity of the modified SGS models, SM, MSM, WALE, SLM, M-MSM, and M-WALE are applied to simulating: channel flows with different friction-velocity-based Reynolds numbers; and turbulent flow past a square cylinder at a higher Reynolds number of 21,400.

OpenFOAM, a C++ code library of classes for developing CFD codes, is used in the present study. OpenFOAM discretizes the governing equations using a finite-volume approach (OpenFOAM, 2013), where the temporal term of the Naviers-Stokes equation is discretized using a four-time-level scheme, which is 3rd order in time (Rossiello *et al.*, 2007). Other terms of the Naviers-Stokes equation are discretized using a second-order central difference. The governing equations are solved sequentially using the pressure-implicit-with splitting-of-operator algorithm. Solution is performed implicitly using matrix inversion with the incomplete Cholesky conjugate gradient methods.

3. Channel flow

Using SM, MSM, WALE, SLM, M-MSM, and M-WALE, fully developed channel flows with a friction-velocity-based Reynolds number (Re_τ) of 395 and 590 were simulated. Periodic boundary conditions are imposed in the stream-wise and span-wise directions. No-slip conditions are imposed at the solid walls. Parameters of the LESs for the channel flow are shown in Table I. The reference data obtained with DNS by Moser *et al.* (1999) are used to verify those computed using the SGS models.

For the fully developed channel flow at $\mathrm{Re}_\tau = 395$, mean velocities (U^+) and turbulence intensities computed by SM, MSM, WALE, SLM, M-MSM, and M-WALE are shown in Figure 1. Turbulence intensities are defined as root-mean-square (RMS) streamwise (u_{rms}), spanwise (v_{rms}), and normal (w_{rms}) velocity fluctuations. Mean velocities calculated by SLM, M-MSM, and M-WALE are closer to DNS's profile than those by SM, MSM, and WALE. U^+ computed by SM is underestimated, a result of excessive dissipation in the near-wall region. U^+ computed by MSM is more accurate

case	Re_b	Re_τ	$L_x \times L_y \times L_z$	$N_x \times N_y \times N_z$	Δx^+	Δy^+	Δz^+
1	13,790	395	$\pi\delta \times 2\delta \times \pi\delta/2$	$40 \times 50 \times 30$	31	0.7-53	21
2	22,000	590	$\pi\delta \times 2\delta \times \pi\delta/2$	$50 \times 60 \times 40$	37	0.6-78	24

Table I. Problem setup of the large eddy simulations

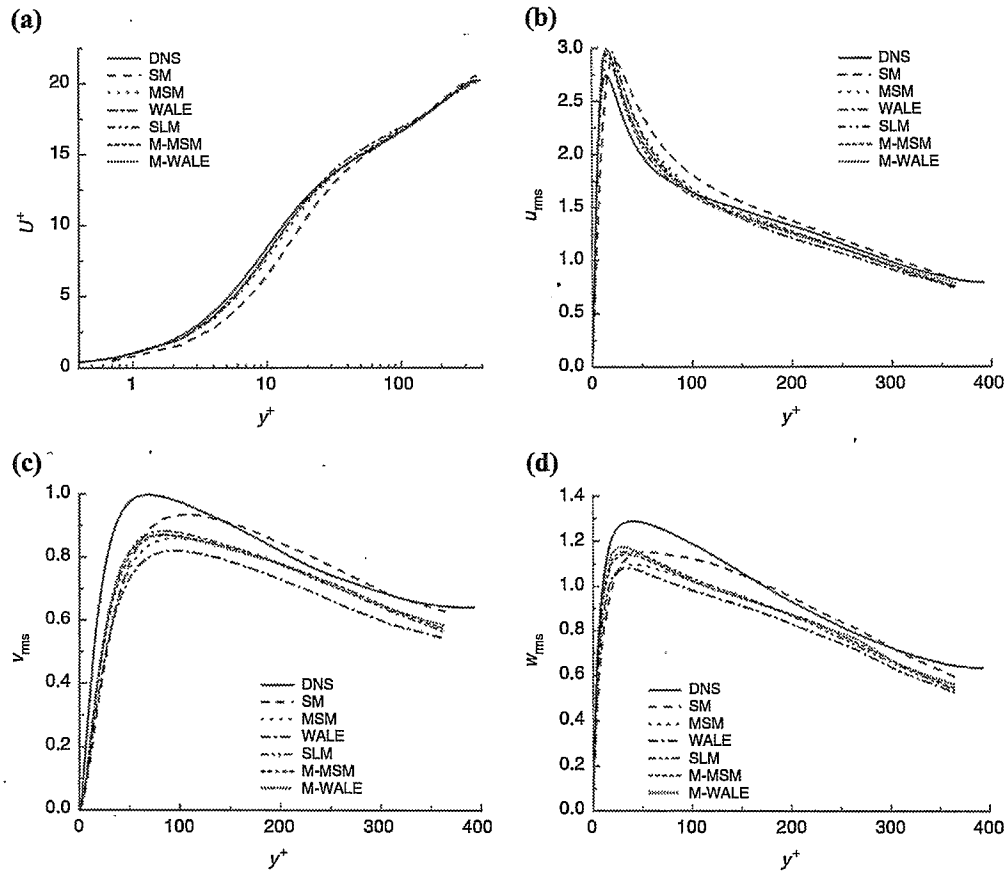

Figure 1.
The results of channel flow at $Re_\tau = 395$

Notes: (a) Mean velocities; (b) velocity fluctuations u_{rms}; (c) velocity fluctuations v_{rms}; (d) velocity fluctuations w_{rms}

than that of SM, because the turbulent energy (q_{sgs}) is more accurately represented in MSM, reducing excessive dissipation in the near-wall region. The mean velocity computed by WALE in the y^+ range of 20-100 is overestimated. The mean velocity computed by M-MALE is the most accurate among all the SGS models.

Figure 1(b) demonstrates that the peak values of the RMS stream-wise velocity fluctuations (u_{rms}) computed with all models are overestimated. The peak values computed by SLM, M-MSM, and M-WALE are a little larger than those of SM, MSM, and WALE, respectively. But, u_{rms} computed with SLM, M-MSM, and M-WALE are more accurate than those of SM, MSM, and WALE, respectively. All of the peak values of the span-wise velocity fluctuations (v_{rms}) are underestimated (Figure 1(c)). v_{rms} computed by SLM, M-MSM, and M-WALE are closer to the DNS data than those of MSM and WALE. However, v_{rms} by SM is in best agreement with the DNS data. Finally, the normal velocity fluctuations (w_{rms}) computed by SLM, M-MSM, and M-WALE are more accurate than those of MSM and WALE (Figure 1(d)). The peak w_{rms} values of SLM, M-MSM, and M-WALE are all underestimated but lie closer to that of DNS than those of SM, MSM, and WALE. The peak w_{rms} value of M-WALE is more accurate than those of SLM and M-MSM.

Figure 2 illustrates a set of results by SM, MSM, WALE, SLM, M-MSM, and M-WALE for channel flow at $Re_\tau = 590$, as compared with the DNS data. Figure 2(a)

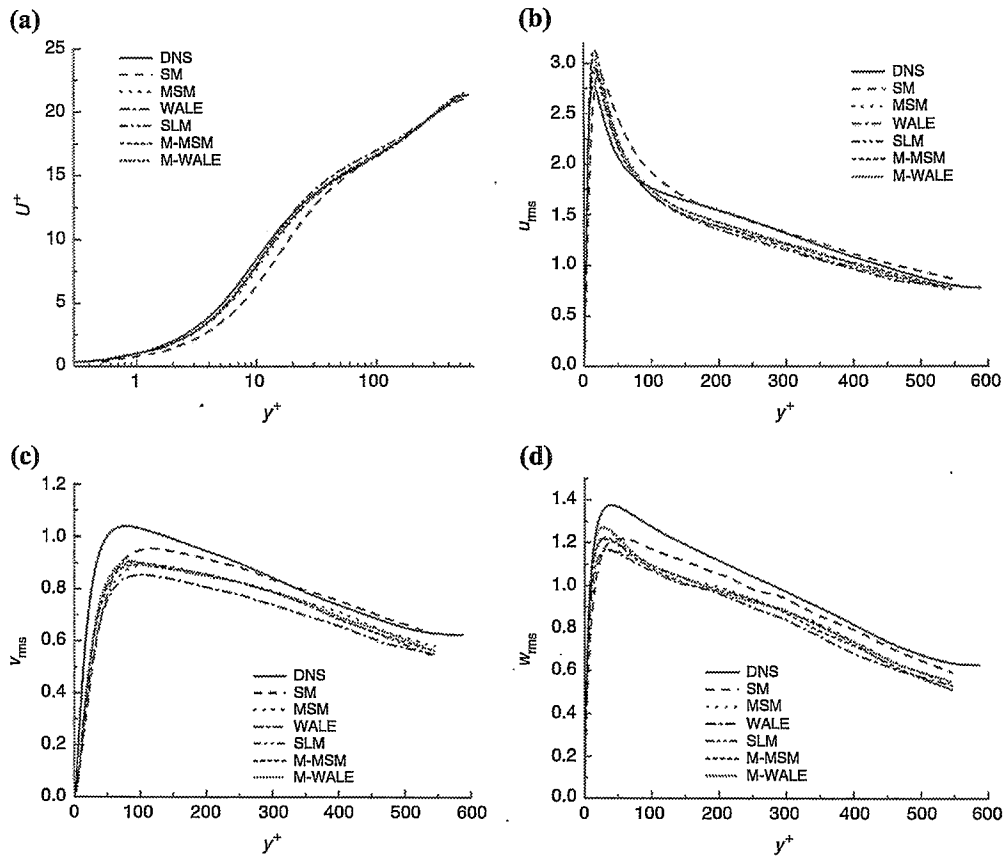

Notes: (a) Mean velocities; (b) velocity fluctuations u_{rms}; (c) velocity fluctuations v_{rms}; (d) velocity fluctuations w_{rms}

Figure 2. The results of channel flow at $\mathrm{Re}_\tau = 590$

illustrates that U^+ computed by SLM, M-MSM, and M-WALE are nearly identical and are more accurate than those of SM, MSM, and WALE. The velocity fluctuations u_{rms} computed by all models at the y^+ range of 5-80 are overestimated (Figure 2(b)). The peak u_{rms} values of M-MSM and M-WALE are closer to the DNS data than those of MSM and WALE, respectively. However, SM is the most accurate in capturing the peak u_{rms}. For all models, v_{rms} and w_{rms} are nearly identical to those computed earlier for channel flow at the Re_τ of 395 (Figure 2(c)-(d)).

Figure 3 shows dimensionless subgrid viscosities ($\langle v_{sgs}\rangle/v$) of SM, MSM, WALE, M-MSM, SLM, and M-WALE for a channel flow at $\mathrm{Re}_\tau = 395$. The dimensionless subgrid viscosities of SM, SLM, MSM, and M-MSM deviate from the theoretical wall-asymptotic behavior (i.e. y^{+3}), while $\langle v_{sgs}\rangle/v$ of SLM and M-MSM are more accurate than those of SM and MSM in the near-wall region. The $\langle v_{sgs}\rangle/v$ of M-WALE is closer to the theoretical wall-asymptotic behavior (y^{+3}) than that of WALE.

The above results indicate that: SLM, M-MSM, and M-WALE are more accurate than SM, MSM, and WALE in simulating wall-bounded turbulent flows; and, the subgrid viscosities of SLM, M-MSM, and M-WALE are closer to the theoretical wall-asymptotic behavior than those of SM, MSM, and WALE, respectively. This analysis suggests that the replacement of the norm of strain rate tensor by the strain

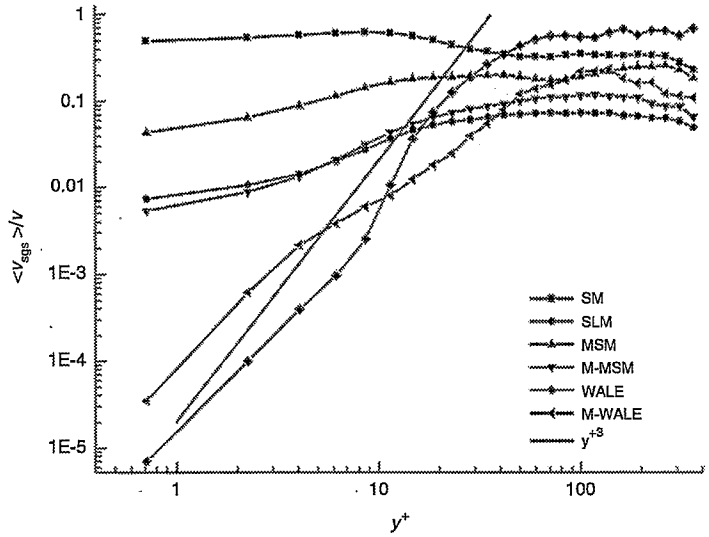

Figure 3.
Subgrid-scale viscosity of channel flow at $Re_\tau = 395$

rate tensor of the smallest resolved scales, as implemented in SLM, M-MSM, and M-WALE, is an important improvement over SM, MSM, and WALE, respectively.

4. Flow past a square cylinder

In order to further validate the modified SGS models, turbulent flow past a square cylinder at a higher Reynolds number of 21,400 is simulated. Computational domain and coordinate definition for this problem are given in Figure 4. The Reynolds number involved in these new simulations is defined as $Re = U_0B/\nu$, where U_0 is the approaching free stream velocity and B is the side length of the three-dimensional square cylinder. As shown in this figure, the computational domain covers $21B$ in the stream-wise (x) direction ($-6.5 < x/B < 14.5$), $9B$ in the lateral direction ($-4.5 < y/B < 4.5$), and $6B$ in the vertical direction. At the inlet, a constant stream-wise velocity is specified, while all other velocities are set to zero. The outlet boundary condition is zero velocity gradient. The lateral boundary conditions are slipping. According to

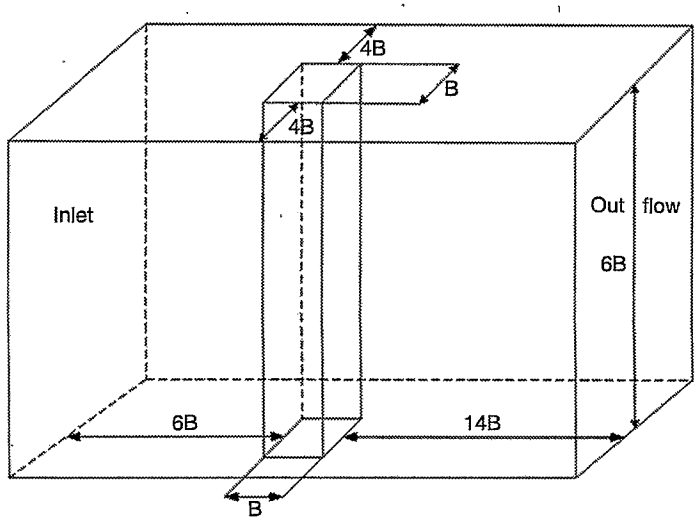

Figure 4.
Geometrical model of flow past a square cylinder

verification studies using wind tunnel experiments (Lyn *et al.*, 1995), non-uniform grids of the computational domain must be used for mesh generation of the square cylinder. In this example, the domain is discretized using a $190 \times 80 \times 22$ grid in the streamwise, transversal, and vertical directions. The grid near the wall region is refined.

Time-averaged turbulent velocities and normal stresses past a square cylinder at a higher Reynolds number of 21,400 at different downstream locations ($x/B = 0.0$, 1.0, 1.5, and 5.0) are presented in Figure 5. The time-averaged stream-wise velocities ($\langle U \rangle$) at these locations computed by SLM, M-MSM, and M-WALE are more accurate than those of SM, MSM, and WALE, respectively. $\langle U \rangle$ computed by SM is the least accurate. The time-averaged transverse velocities ($\langle V \rangle$) at $x/B = 1.0$ by SLM, M-MSM, and M-WALE are more accurate than those of SM, MSM, and WALE, respectively (Figure 5(b)). The time-averaged stream-wise normal stresses ($\langle u'^2 \rangle$) by SLM, M-MSM, and M-WALE are closer to the experiment data than those of SM, MSM, and WALE, respectively (Figure 5(c)). Finally, the time-averaged transverse normal stresses $\langle v'^2 \rangle$ at $x/B = 1.0$ by SLM, M-MSM, and M-WALE are more accurate than those of SM, MSM, and WALE, but $\langle v'^2 \rangle$ at $x/B = 1.5$ and 5.0 by SM, MSM, and WALE are more accurate than those of SLM, M-MSM, and M-WALE (Figure 5(d)).

Figure 6 illustrates that the time-averaged stream-wise velocities ($\langle U \rangle$) at centerline by SLM, M-MSM, and M-WALE are closer to the experiment data than

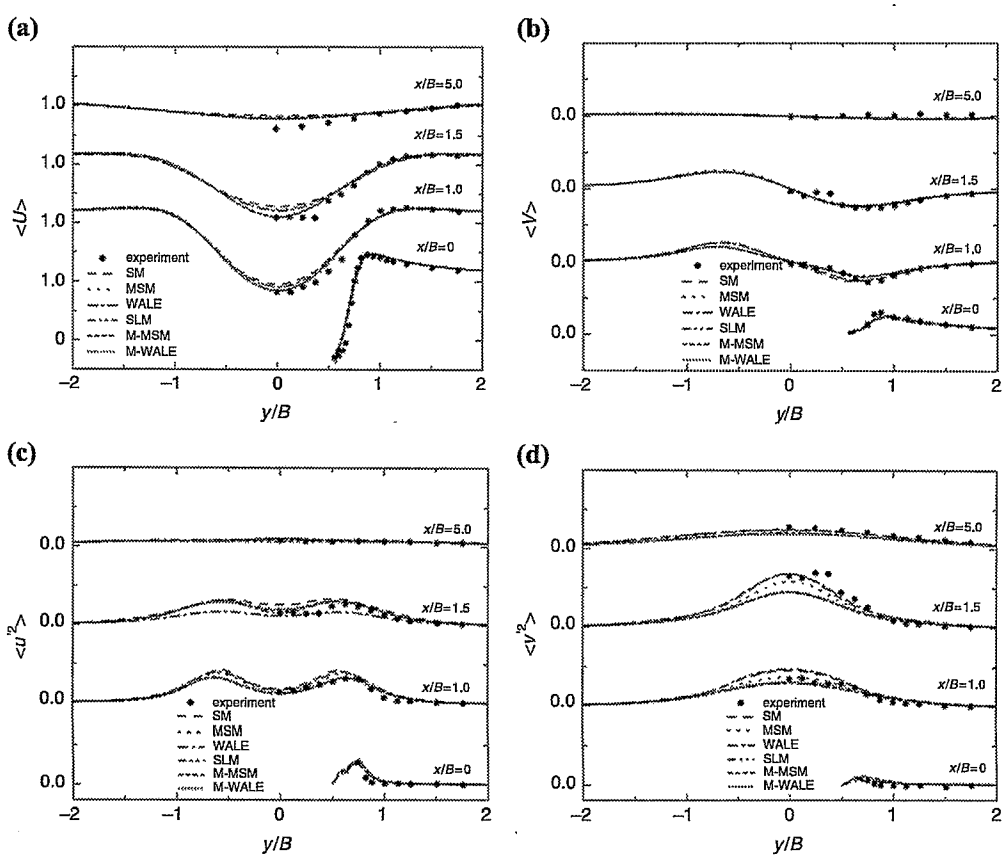

Notes: (a) Time-averaged stream-wise velocity; (b) time-averaged transverse velocity; (c) time-averaged stream-wise normal stress; (d) time-averaged transverse normal stress

Figure 5. The results of flow past a square cylinder at x/B = 0.0, 1.0, 1.5, and 5.0

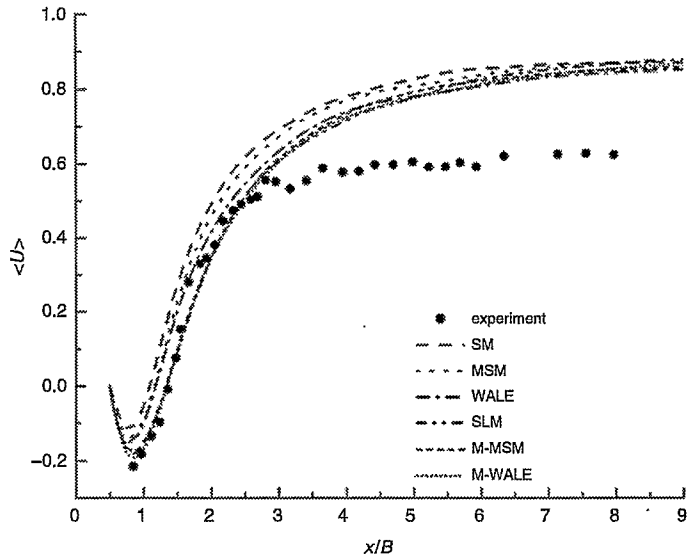

Figure 6. Time-averaged centerline recovery of the stream-wise velocity

those of SM, MSM, and WALE, respectively. $\langle U \rangle$ computed by M-WALE is more accurate than those of the other SGS models, while $\langle U \rangle$ by SM is the least accurate.

5. Conclusions

A new set of modified SGS models, i.e., M-MSM and M-WALE, obtained by replacing the norm of strain rate tensor in the original eddy-viscosity models (MSM and WALE, respectively) with the norm of strain rate tensor of the smallest scales, is proposed. By simulating channel flows at a Re_τ of 395 and 590 and comparing the results against DNS, the new models are more accurate than the original eddy-viscosity models. Specifically, SLM, M-MSM, and M-WALE are more accurate than SM, MSM, and WALE, respectively. In the near-wall region, SGS viscosities computed by SLM, M-MSM, and M-WALE are closer to the expected y^{+3} behavior than the original models. Moreover, results simulating turbulent flow past a square cylinder at a higher Reynolds number of 21,400 suggest that the new models are again more accurate, as they can more reasonably capture subgrid viscosity in the near-wall region. This suggests that the norm of the strain rate tensor of the smallest scales used in the new models makes eddy viscosity in the near-wall region approach zero in a physical sense.

References

Chung, D. and Matheou, G. (2014), "Large-eddy simulation of stratified turbulence. Part I: a vortex-based subgrid-scale model", *Journal of the Atmospheric Sciences*, Vol. 71 No. 5, pp. 1863-1879.

Davidson, P.A. (2004), *Turbulence*, Oxford University Press, London.

Germano, M., Piomelli, U., Moin, P. and Cabot, W.H. (1991), "A dynamic subgrid-scale eddy viscosity model", *Physics of Fluids A: Fluid Dynamics (1989-1993)*, Vol. 3 No. 7, pp. 1760-1765.

Ghosal, S., Lund, T.S., Moin, P. and Akselvoll, K. (1995), "A dynamic localization model for large-eddy simulation of turbulent flows", *Journal of Fluid Mechanics*, Vol. 286, pp. 229-255.

Gu, Z.L., Jiao, J.Y. and Su, J.W. (2011a), "Large-eddy simulation of the wind field and plume dispersion within different obstacle arrays using a dynamic mixing length subgrid-scale model", *Boundary-Layer Meteorology*, Vol. 139 No. 3, pp. 439-455.

Gu, Z., Jiao, J., Zhang, Y. and Su, J. (2011b), "The nature of a universal subgrid eddy viscosity model in a turbulent channel flow", *EPL (Europhysics Letters)*, Vol. 94 No. 3, p. 34003, available at: http://iopscience.iop.org/article/10.1209/0295-5075/94/34003/pdf

Huang, S. and Li, Q.S. (2010), "A new dynamic one-equation subgrid-scale model for large eddy simulations", *International Journal for Numerical Methods in Engineering*, Vol. 81 No. 7, pp. 835-865.

Hughes, T.J.R., Mazzei, L. and Jansen, K.E. (2000), "Large eddy simulation and the variational multiscale method", *Computing and Visualization in Science*, Vol. 3 Nos 1-2, pp. 47-59.

Hughes, T.J.R., Oberai, A.A. and Mazzei, L. (2001a), "Large-eddy simulation of turbulent channel flows by the variational multiscale method", *Physics of Fluids*, Vol. 13 No. 6, pp. 1784-1799.

Hughes, T.J.R., Feijoo, G.R., Mazzei, L. and Quincy, J.B. (1998), "The variational multiscale method – a paradigm for computational mechanics", *Computer Methods in Applied Mechanics Engineering*, Vol. 166 No. 1, pp. 2-24.

Hughes, T.J.R., Mazzel, L., Oberai, A.A. and Wray, A.A. (2001b), "The multiscale formulation of large-eddy simulation: decay of homogeneous isotropic turbulence", *Physics of Fluids*, Vol. 13 No. 2, pp. 505-512.

Iwamoto, K., Kasagi, N. and Suzuki, Y. (2005), "Direct numerical simulation of turbulent channel flow at $Re_\tau = 2003$", *Proceeding of 6th Symposium on Smart Control of Turbulence, Tokyo, March 6-9*, pp. 327-333.

Lee, J., Choi, H. and Park, N. (2010), "Dynamic global model for large eddy simulation of transient flow", *Physics of Fluids (1994-Present)*, Vol. 22 No. 7, p. 075106.

Liu, S., Meneveau, C. and Katz, J. (1994), "On the properties of similarity subgrid scale models as deduced from measurements in a turbulent jet", *Journal of Fluid Mechanics*, Vol. 275, pp. 83-119.

Lyn, D.A., Einav, S., Rodi, W. and Park, J.H. (1995), "A laser-doppler velocimetry study of ensemble-averaged characteristics of turbulent near wake of a square cylinder", *Journal of Fluid Mechanics*, Vol. 304, pp. 285-319.

Meneveau, C., Lund, T.S. and Cabot, W.H. (1996), "A lagrangian dynamic subgrid-scale model of turbulence", *Journal of Fluid Mechanics*, Vol. 319, pp. 353-385.

Misra, A. and Pullin, D.I. (1997), "A vortex-based subgrid stress model for large-eddy simulation", *Physics of Fluids (1994-present)*, Vol. 9 No. 8, pp. 2443-2454.

Moser, R.D., Kim, J. and Mansour, N.N. (1999), "Direct numerical simulation of turbulent channel flow up to $Re_\tau = 590$", *Physics of Fluids*, Vol. 11 No. 4, pp. 943-945.

Nicoud, F. and Ducros, F. (1999), "Subgrid-scale stress modelling based on the square of the velocity gradient tensor", *Flow Turbulence and Combustion*, Vol. 62 No. 3, pp. 183-200.

OpenFOAM (2013), "OpenFoam's user guide", OpenFOAM version 2.2.0, available at: www.openfoam.com/

Rossiello, G., De Palma, P., Pascazio, G. and Napolitano, M. (2007), "Third-order-accurate fluctuation splitting schemes for unsteady hyperbolic problems", *Journal of Computational Physics*, Vol. 222 No. 1, pp. 332-352.

Sagaut, P. (1996), "Simulations of separated flows with subgrid models", *La Recherche Aérospatiale*, Vol. 1, pp. 51-63.

Singh, S. and You, D. (2013), "A dynamic global-coefficient mixed subgrid-scale model for large-eddy simulation of turbulent flows", *International Journal of Heat and Fluid Flow*, Vol. 42, pp. 94-104.

Smagorinsky, J. (1963), "General circulation experiments with primitive equations, I – the basic experiment", *Monthly Weather Review*, Vol. 91 No. 3, pp. 99-164.

White, B.L. and Nepf, H.M. (2008), "A vortex-based model of velocity and shear stress in a partially vegetated shallow channel", *Water Resources Research*, Vol. 44 No. 1, doi: 10.1029/2006WR005651. available at: http://onlinelibrary.wiley.com/doi/10.1029/2006WR005651/epdf

Zhaolin, G., Jianying, J., Yunwei, Z. and Junwei, S. (2012), "Large eddy simulation using a dynamic mixing length subgrid-scale model", *International Journal for Numerical Methods in Fluids*, Vol. 69 No. 9, pp. 1457-1472.

Corresponding author
Jianying Jiao can be contacted at: jiaojianying@gmail.com